NOVA LUCE

9844103

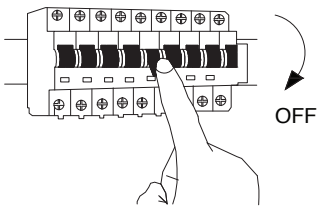

1. Turn off the general switch

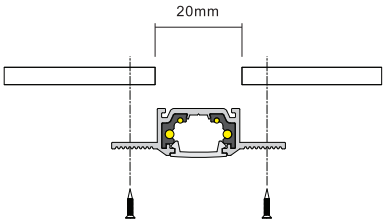

2. Alight where to place the track

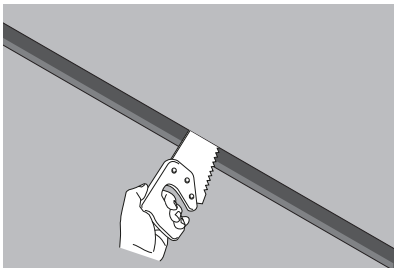

3. Cut it out

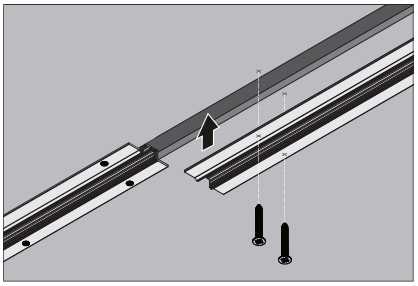

4. Apply screws

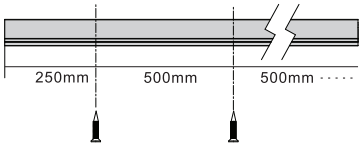

5. Screw installation



6. Carefully align the product

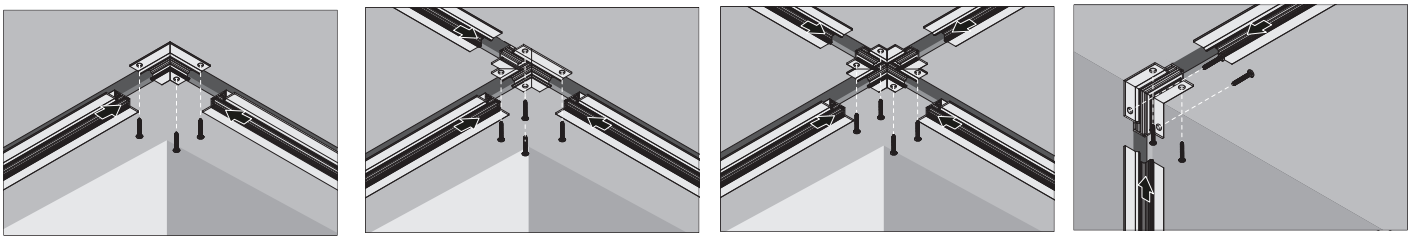

7. Make connections

NOVA LUCE

9844103

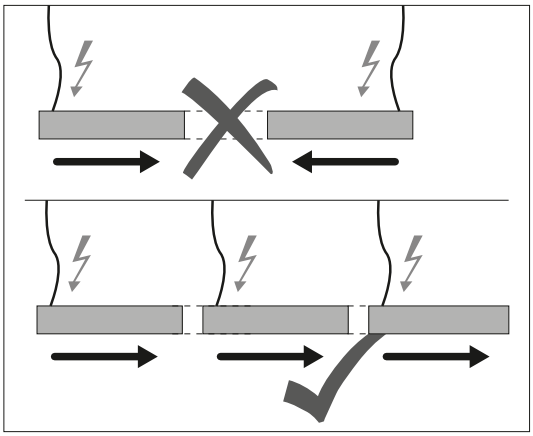

8. Connect

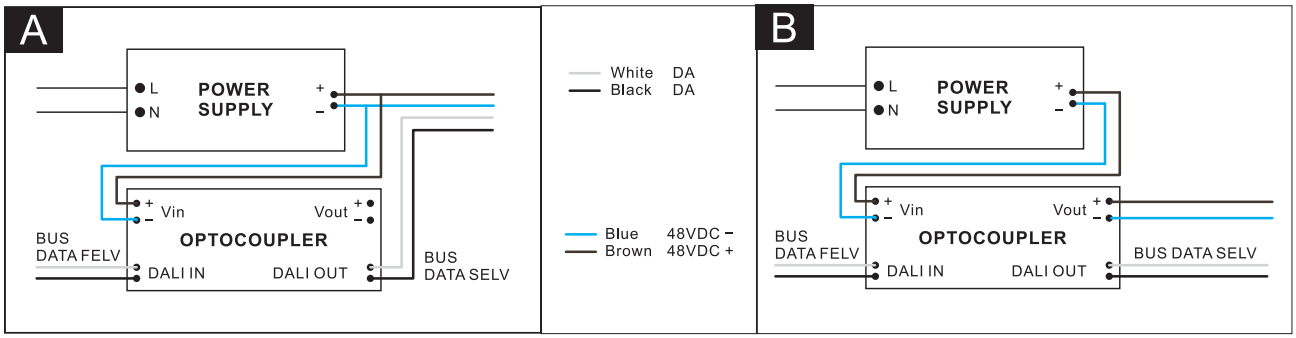

9. Connect the wires

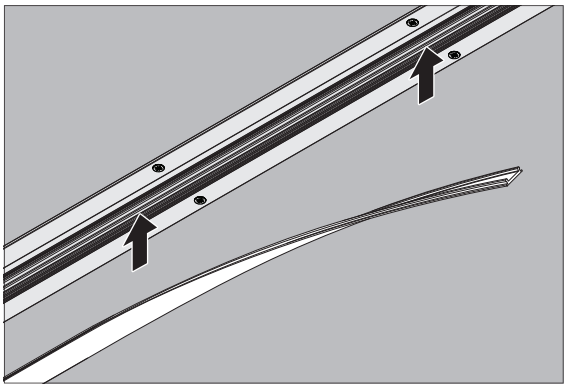

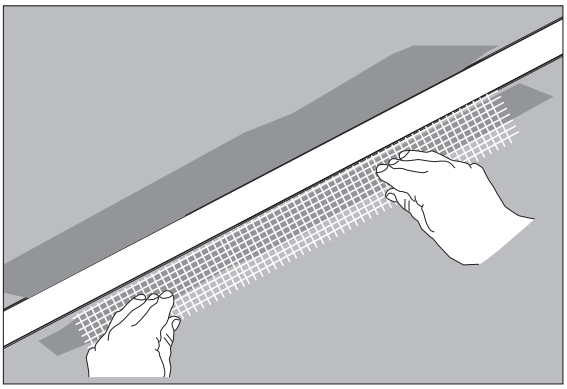

10. Cover the areas

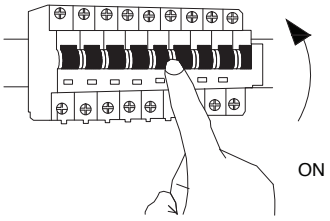

11. Turn on the general switch

NOVA LUCE

WAYS TO CONNECT

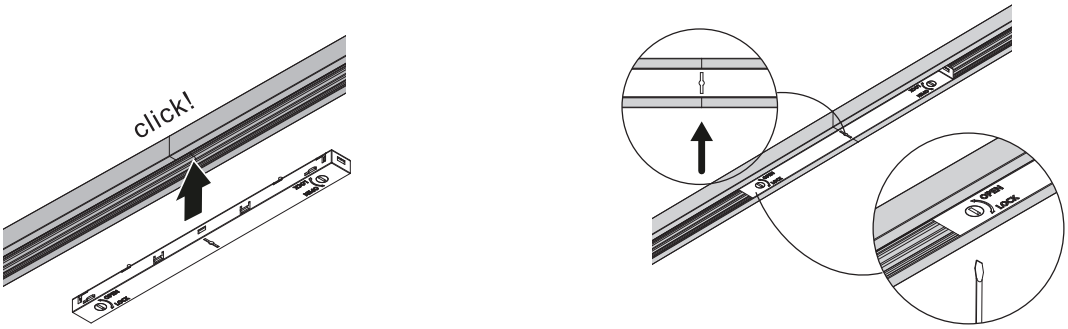

Strait connector

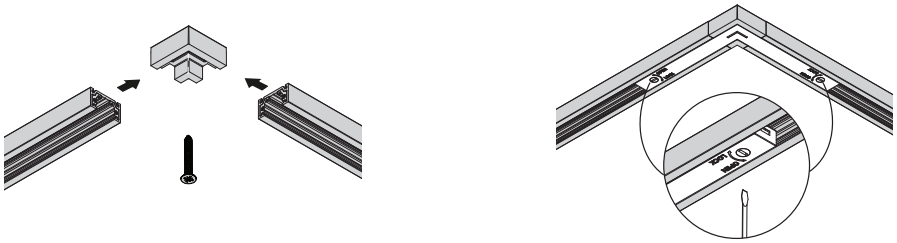

Corner 90°

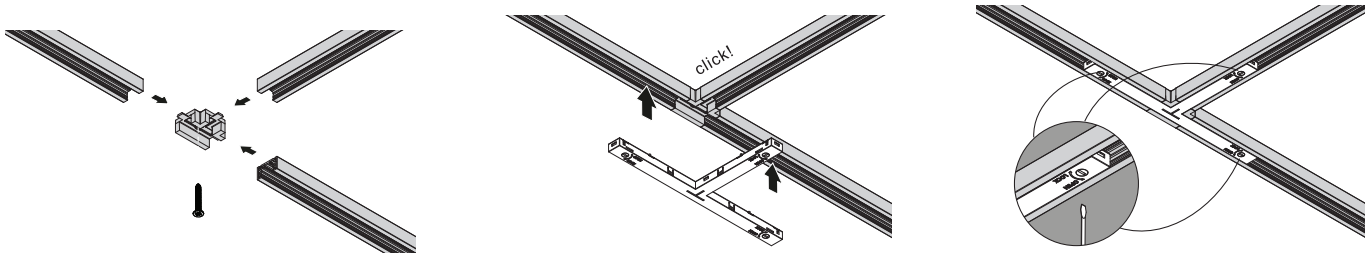

T Corner

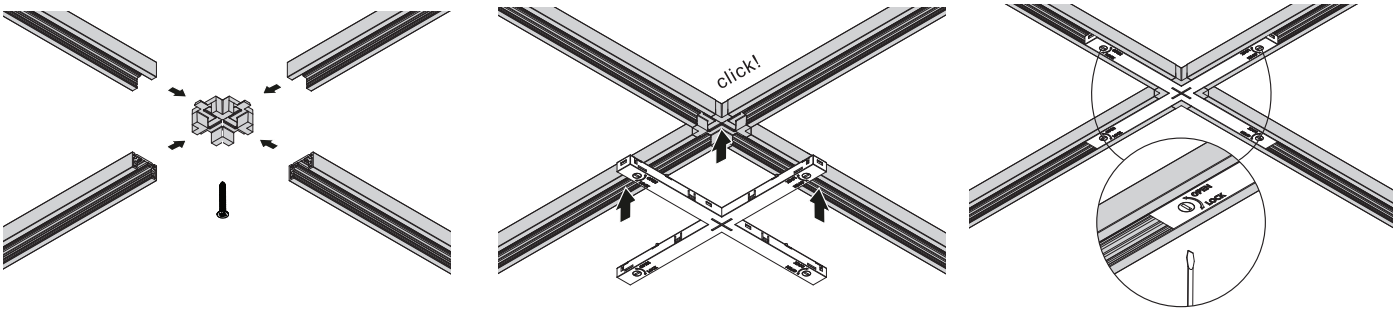

+ Corner

NOVA LUCE

WAYS TO CONNECT

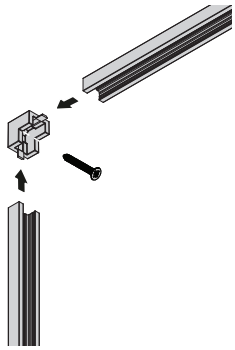

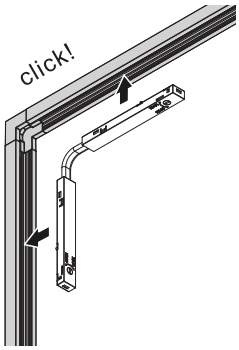

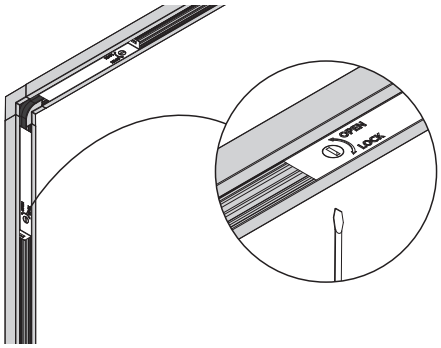

L Corner

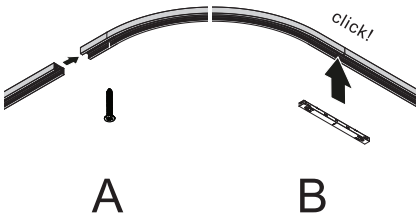

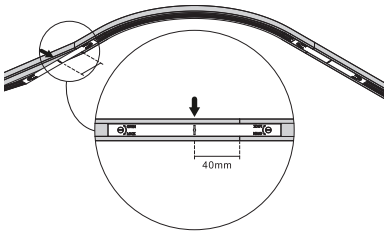

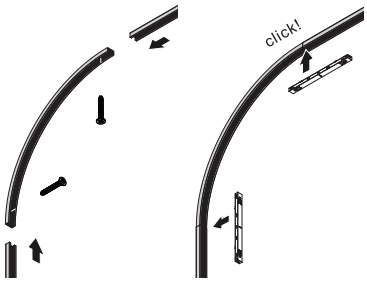

Corner V90°

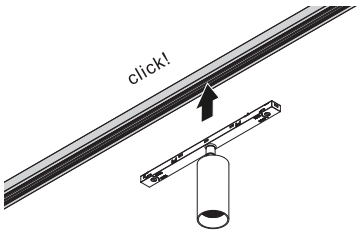

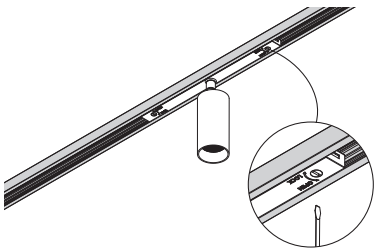

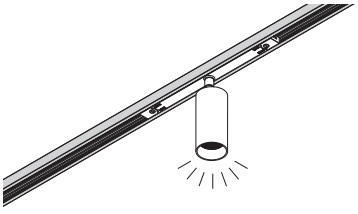

Click the product in to

NOVA LUCE

9844103

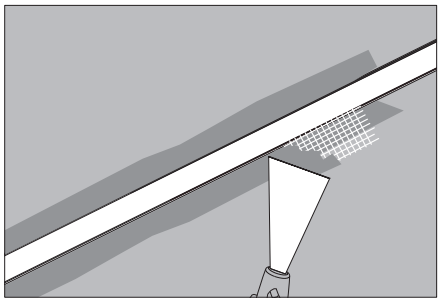

12 Apply cement

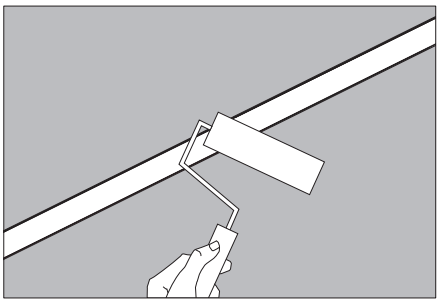

13 Paint

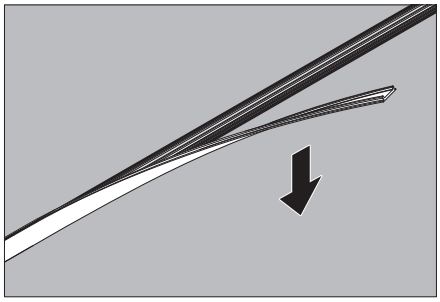

14. Apply the top cap

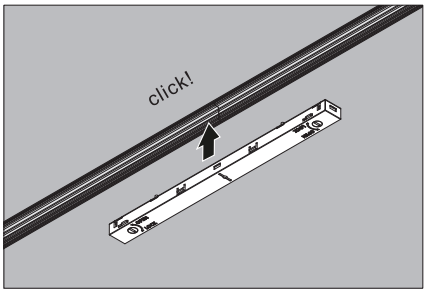

15. Click the product in to place

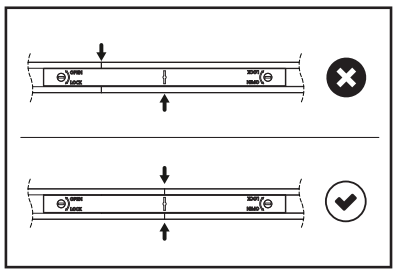

16. Make sure its in the center

CAUTION

TO REDUCE THE RISK
OF OVERHEATING AND FIRE,
DO NOT BRIDGE CONDUCTORS

17. Do not bridge conductors

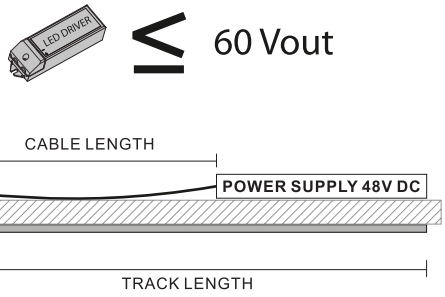

VOLTAGE DROP TABLE

POWER(W)	CABLE CROSS-SECTION(mm²)	CABLE LENGTH(m) < 5	< 10	< 20	< 30
		TRACK LENGTH(m)			
40	0,75	30	30	30	30
	1,5	30	30	30	30
60	0,75	30	30	20	10
	1,5	30	30	30	20
100	0,75	20	10	×	×
	1,5	20	20	10	×

18. Recommended track connection