SINGLE-PHASE LIGHTING BUS DUCT

MAYTONI

SINGLE-PHASE LIGHTING BUS DUCT

The bus duct is the basis for the construction of track lighting systems and is intended for installation and supply of power lines to track lighting fixtures in AC networks with a rated voltage of 230V and a frequency of 50Hz. The bus duct may be used indoors only in the absence of an aggressive environment and foreign aerosol particles at a temperature from 0 °C to +50 °C and a max. relative humidity of 80%. Options may be installed on walls and ceilings, in grooves, in specially prepared recesses made of normally flammable materials. There is also another installation option using rope suspensions. The bus duct is supplied in segments with a length of 1 and 3 meters. It is allowed to cut off segments and build structures of various shapes using connectors.

TECHNICAL DATA

Model	TRX001-111, TRX004-111	TRX001-112, TRX004-112
Supply voltage and frequency	~230V 50Hz	
Rated current	10A	
Electrical shock protection class	I	
Mounting method	Surface-mounted/suspended/built-in	
Degree of protection from moisture and dust	IP20	
Climatic version	UKHL4	
Operating temperature	0°C - +50°C	
Housing material	Aluminium	
Colour	Black/white	
Segment length	1m	2m

SINGLE-PHASE LIGHTING BUS DUCT

DIAGRAM OF SURFACE-MOUNTED SINGLE-PHASE BUSDUCT

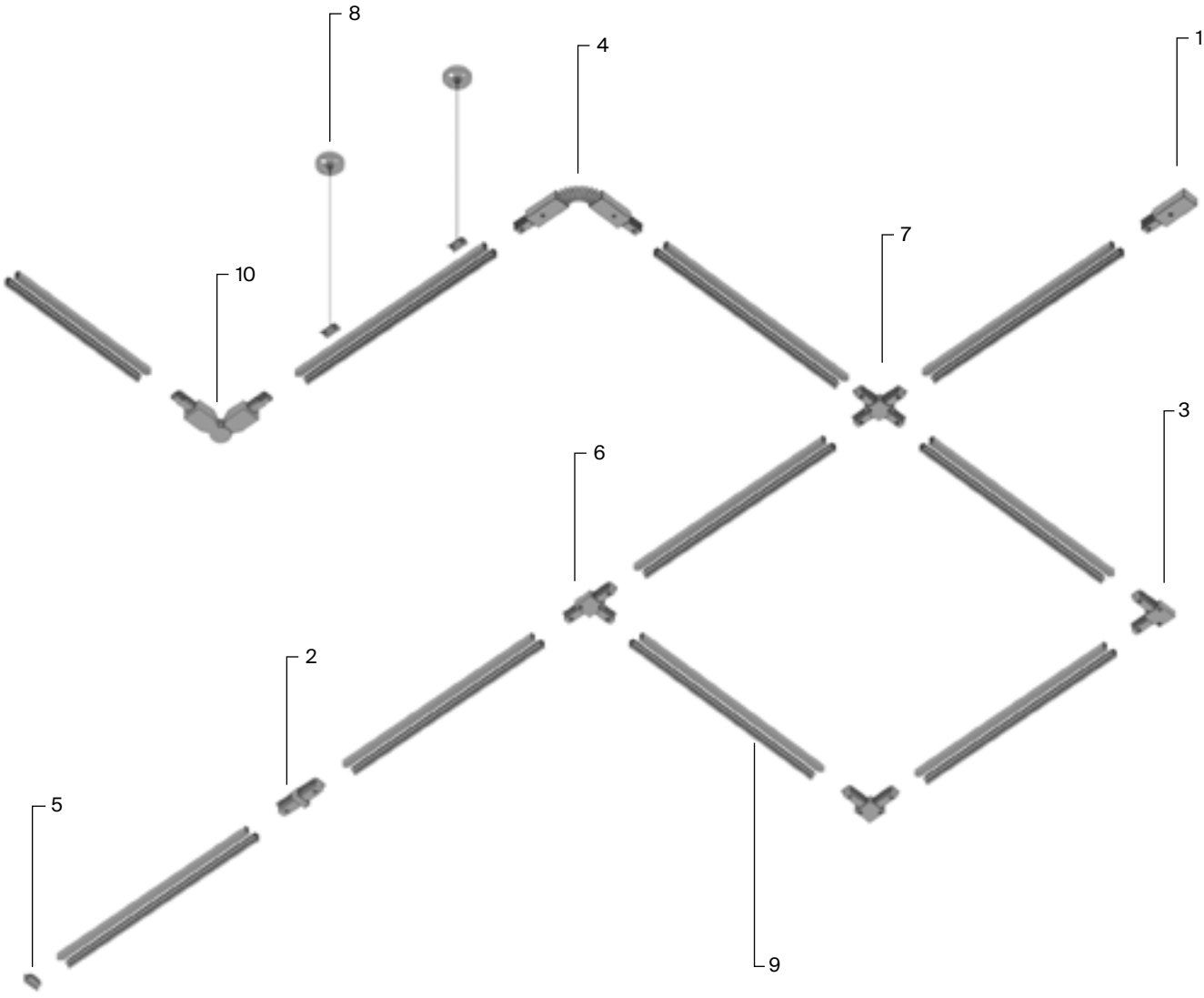

1 power lead-in TRA001B-11B TRA001B-11W	2 direct connector TRAO01C-11B TRAO01C-11W	3 elbow connector TRAO01CL-11B TRAO01CL-11W	4 flexible connector TRAO01CF-11B TRAO01CF-11W	5 sealing plug TRAO01EC-11B TRAO01EC-11W	6 T-shaped connector TRAO01CT-11B TRAO01CT-11W
7 X-shaped connector TRAO01CX-11B TRAO01CX-11W	8 suspension mount TRAO01CW-11B TRAO01CW-11W	9 busduct TRX001 -111B TRX001 -111W TRX001 -112B TRX001 -112W TRX001-113B TRX001-113W	10 rotatable swivel connector TRAO01CF-11B TRAO01CF-11W		

SCOPE OF SUPPLY FOR SINGLE-PHASE LIGHTING BUS DUCT

SURFACE-MOUNTED SINGLE-PHASE BUS DUCT

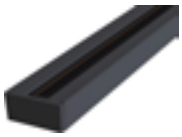

single-phase bus duct
20 × 33 × 1000 mm

TRX001-111B
TRX001-111W

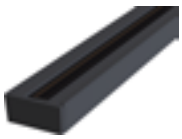

single-phase bus duct
20 × 33 × 2000 mm

TRX001-112B
TRX001-112W

ACCESSORIES FOR SURFACE-MOUNTED SINGLE-PHASE BUS DUCT



power lead-in
22 × 38 × 112 mm

TRA001B-11B
TRA001B-11W



direct connector
20 × 33 × 71 mm

TRA001C-11B
TRA001C-11W



direct connector
20 × 60 × 80 mm

TRA002C-11B
TRA002C-11W



flexible connector
20 × 35 × 280 mm

TRA001CF-11B
TRA001CF-11W



elbow connector
17 × 70 × 70 mm

TRA001CL-11B
TRA001CL-11W



elbow connector
17 × 70 × 70 mm

TRA001CT-11B
TRA001CT-11W



T-shaped connector
20 × 95 × 130 mm

TRA002CT-11B
TRA002CT-11W



rope suspension
32 × 32 × 2000 mm

TRA001CW-11B
TRA001CW-11W



X-shaped connector
23 × 110 × 110 mm

TRAOO1CX-11B
TRAOO1CX-11W

SCOPE OF SUPPLY FOR SINGLE-PHASE LIGHTING BUS DUCT

ACCESSORIES FOR SURFACE-MOUNTED SINGLE-PHASE BUS DUCT



X-shaped connector
20 × 130 × 130 mm

TRA002CX-11B
TRA002CX-11W



elbow connector
33 × 2000 × 20 mm

TRA002CL-11B
TRA002CL-11W



угловой коннектор
33 × 2000 × 20 mm

TRA002B-11B
TRA002B-11W



sealing plug
23 × 23 × 38 mm

TRAO01EC-11B
TRAO01EC-11W



spring holder
37 x 45 x 32 mm

TRA002HR-11B

sealing plug
20 × 60 × 37 mm

TRAO02EC-11W

SINGLE-PHASE LIGHTING BUS DUCT

DIAGRAM OF BUILT-IN SINGLE-PHASE BUSDUCT

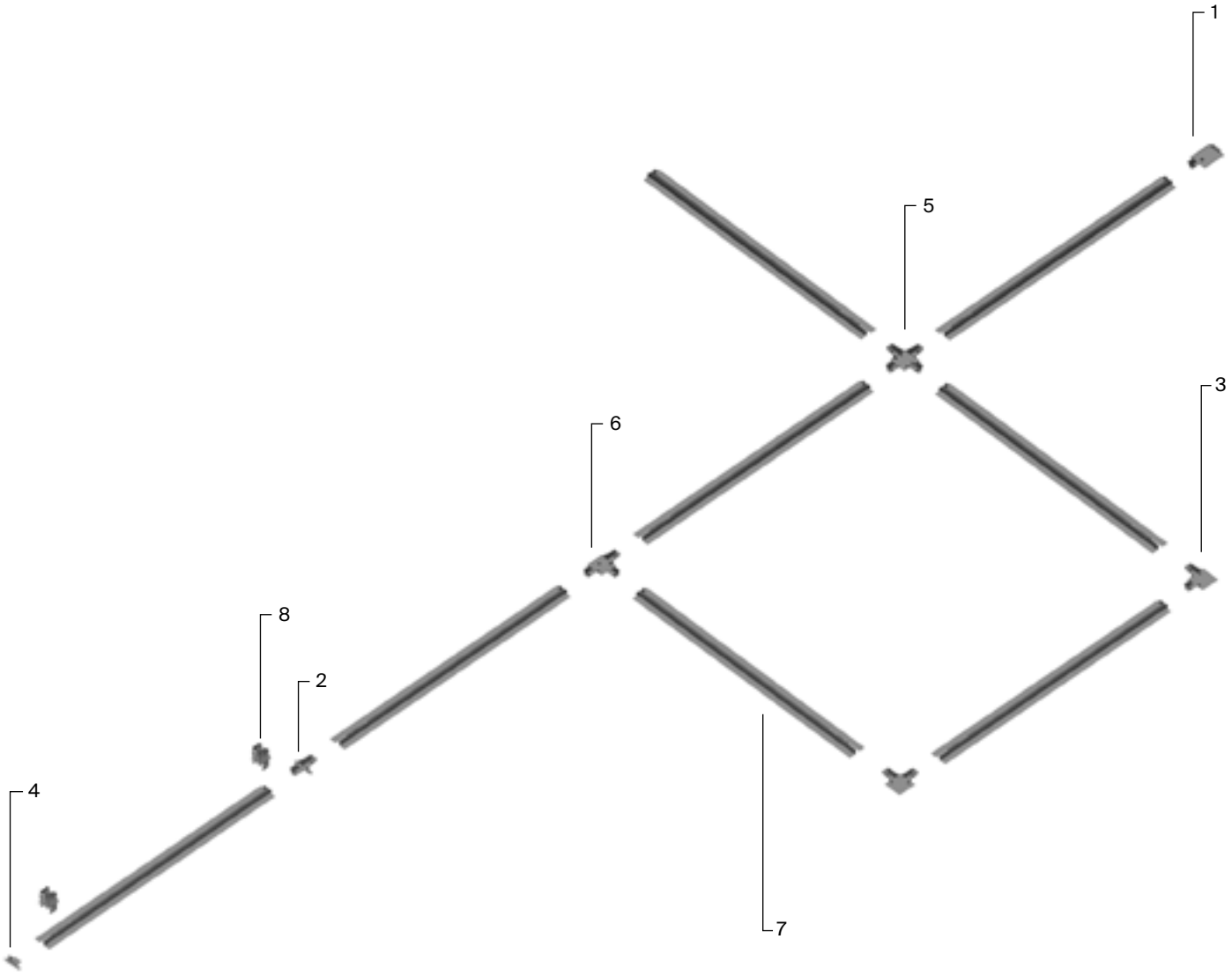

1 power lead-in TRA002B-11B TRA002B-11W	2 direct connector TRAO02C-11B TRAOO2C-11W	3 elbow connector TRAOO2CL-11B TRAOO2CL-11W	4 sealing plug TRAOO2EC-11B TRAOO2EC-11W	5 X-shaped connector TRAOO2CX-11B TRAOO2CX-11W	6 T-shaped connector TRAOO2CT-11B TRAOO2CT-11W
7 busduct TRX004 -111B TRX004 -111W TRX004 -112B TRX004 -112W	8 spring holder TRA002HR-11B				

SCOPE OF SUPPLY FOR SINGLE-PHASE LIGHTING BUS DUCT

BUILT-IN BUS DUCT



single-phase bus duct
20 × 60 × 1000 mm

TRX004-111B
TRX004-111W



single-phase bus duct
20 × 60 × 2000 mm

TRX004-112B
TRX004-112W

LAMPS FOR SINGLE-PHASE LIGHTING BUS DUCT



Track lamps

1 × GU10 10W
∅52 × l = 92 × h = 123

TR031-1-GU10-B
TR031-1-GU10-BBS
TR031-1-GU10-BMG
TR031-1-GU10-W
TR031-1-GU10-WBS
TR031-1-GU10-WMG



Focus

1 × GU10 50W
w = 60 × l = 130 × h = 210

TR004-1-GU10-B
TR004-1-GU10-W



Elti

1 × GU10 50W
w = 200 × l = 53 × h = 180

TR005-1-GU10-B
TR005-1-GU10-W



Vuoro

LED 6W
w = 58 × l = 98 × h = 130
450 lm, 3000 /4000K
>80 Ra, 24°

TR003-1-6W3K-B
TR003-1-6W3K-W
TR003-1-6W4K-B
TR003-1-6W4K-W



Vuoro

LED 12W
w = 78 × l = 118 × h = 147
750 lm, 3000 /4000K
>80 Ra 24°

TR003-1-12W3K-B
TR003-1-12W3K-W
TR003-1-12W4K-B
TR003-1-12W4K-W



Vuoro

LED 17W
w = 89 × l = 138 × h = 165
950 lm, 3000 /4000K
>80 Ra, 24°

TR003-1-17W3K-B
TR003-1-17W3K-W
TR003-1-17W4K-B
TR003-1-17W4K-W

LAMPS FOR SINGLE-PHASE LIGHTING BUS DUCT



Vuoro

LED 30W
w = 89 × l = 138 × h = 165
2400 lm, 3000 /4000K
>80 Ra, 24°

TR003-1-30W3K-B
TR003-1-30W3K-W
TR003-1-30W4K-B
TR003-1-30W4K-W



Vuoro

LED 40W
∅89 × l = 170 × h = 165
3200 lm, 3000 /4000K
>80 Ra, 24°

TR003-1-40W3K-B
TR003-1-40W3K-W
TR003-1-40W4K-B
TR003-1-40W4K-W



Track lamps

1 × GU10 50W
w = 54 × l = 100 × h = 179

TR002-1-GU10-B
TR002-1-GU10-W



Track lamps

1 × GU10 50W
∅60 × h = 300, 400/1800 mm

TR008-1-GU10-B
TR008-1-GU10-W



Track lamps

LED 12W
∅52 × h = 157
1050 lm, 3000 /4000K
>80 Ra, 40°

TR021-1-12B3K
TR021-1-12B4K
TR021-1-12W3K
TR021-1-12W4K

GENERAL RECOMMENDATIONS AND PRECAUTIONS



All installation and mounting services must be rendered by persons having the appropriate permits and qualifications. Please contact a qualified electrician, where necessary.

All installation and dismantling work should be performed in a powered down state only.

The bus duct may not be used without a protective grounding wire.

When building a tracking system, make sure not to exceed the total load of electric consumers of 10A (total power of lighting fixtures is not more than 2300 W).

Do not install the bus duct at a height below 2.5 meters, or in places where people may accidentally touch the bus duct.

Do not use the product with a damaged housing and damaged insulation of the supply cable.

The product is intended for indoor use only.

Do not use the product in rooms with high humidity and with a high content of dust or aerosol particles in the air.

Make sure to install lighting fixtures on a 1m bus duct segment with a spacing of no more than 25 cm.

Use a soft, dry cloth to clean the product with the power switched off. Do not use chemically aggressive cleaning agents.

GENERAL RECOMMENDATIONS AND PRECAUTIONS

PERMISSIBLE LOADS AND POSITIONS OF FASTENING ELEMENTS

SUSPENDED MOUNTING

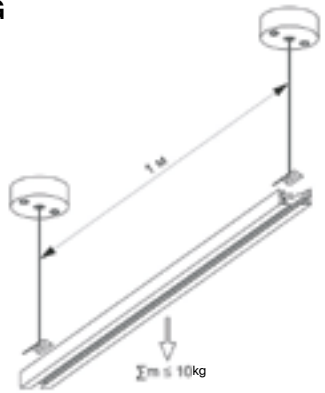

The max. distance between suspension mounts is 1 m. The recommended distance between lamps is 25 cm. The maximum permissible load on the surface-mounted bus duct installed using suspension fasteners is 10 kg per 1 meter. In order to secure the uniform distribution of lamp weight, please use 4 mounts in bus duct models TRX002-111, and 6 suspension mounts in TRX003-111.

INSTALLATION ON A HARD SURFACE

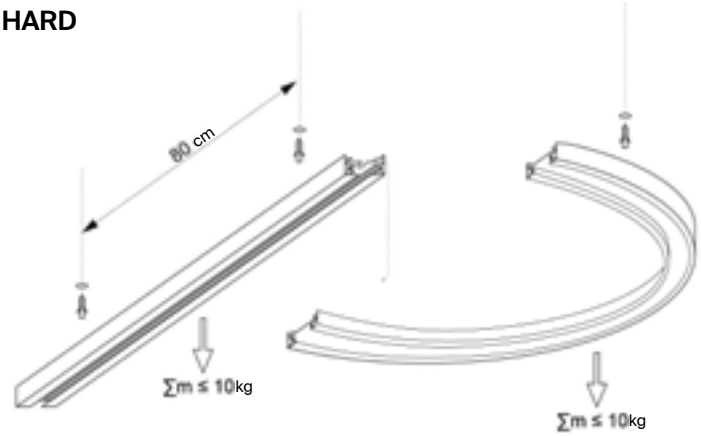

The max. distance between fasteners to the surface is 80 cm. The recommended distance between lamps is 25 cm. The maximum permissible load on the surface-mounted bus duct installed on a rough surface is 10 kg per 1 meter. In order to create closed continuous contours, please use TRA001CF-11, TRA001CS-11 and arrange power lead-in through them.

BUILT-IN INSTALLATION USING SPRING HOLDERS

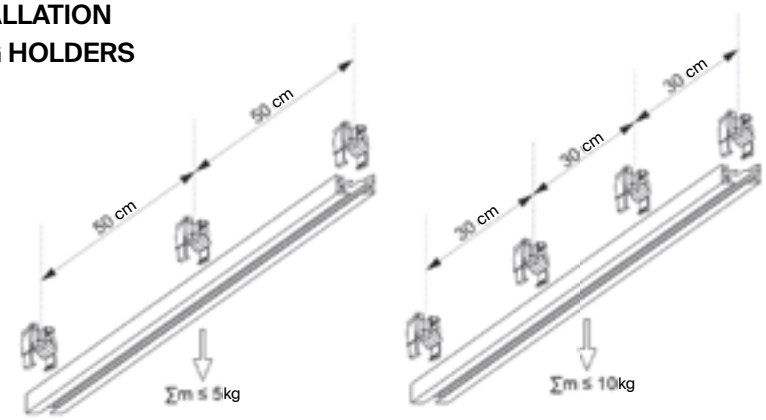

The distance between the holders is selected based on the weight of installed lamps. The lamp weight at 1 meter ≤ 5 kg - the distance between holders is 50 cm. The lamp weight at 1 meter ≤ 10 kg — the distance between holders is 30 cm. The recommended distance between lamps is 25 cm. The max. permissible load on the built-in bus duct installed using holders is 10 kg per 1 meter.

CONNECTION OF A SINGLE-PHASE BUSDUCT TO POWER SUPPLY

A single-phase bus duct of all types is connected to a 230V 50Hz AC mains through a power lead-in. The relevant end power lead-in is included with delivery of each bus duct segment.

1. Before connecting the bus duct, make sure to de-energize the supply cable. Remove the bus duct from the packaging, make sure that the housing and current-carrying parts are not damaged. Disconnect the power lead-in from the bus duct.
2. Remove the screw on the front side of the power lead-in using a screwdriver and remove the plastic cover.
3. Lay the three-core cable to the bus duct installation site. Connect the protective ground wire to the yellow-green wire on the power lead-in housing. Pull the phase and neutral wires through the hole in the back side of the power lead-in.
4. Fasten the phase and neutral conductors on the contact plates using clamping screws.
5. Close the power lead-in by taking steps stated in clause 2 in a reverse order.
6. Insert the connected power lead-in into the bus duct. Install the bus duct in the most relevant way.

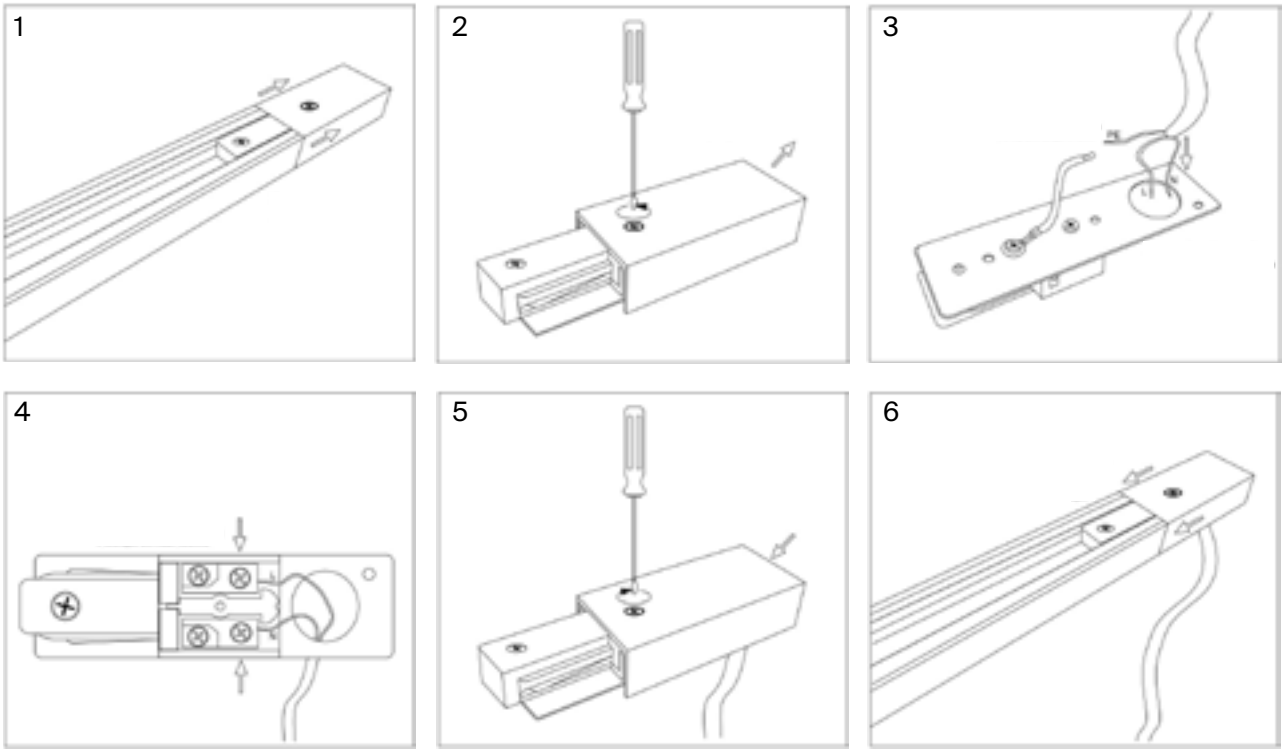

INSTALLATION PLAN FOR SURFACE-MOUNTED SINGLE-PHASE BUSDUCT

The surface-mounted single-phase bus duct may be installed on any hard surface made of normally flammable materials. During the installation, carefully prepare and correctly mark the mounting surface to avoid bending moments that may cause deformation of the bus duct.

When installing the surface-mounted bus duct, select the appropriate fasteners based on the material of the mounting surface.

BUSDUCT INSTALLED ON A CONCRETE CEILING

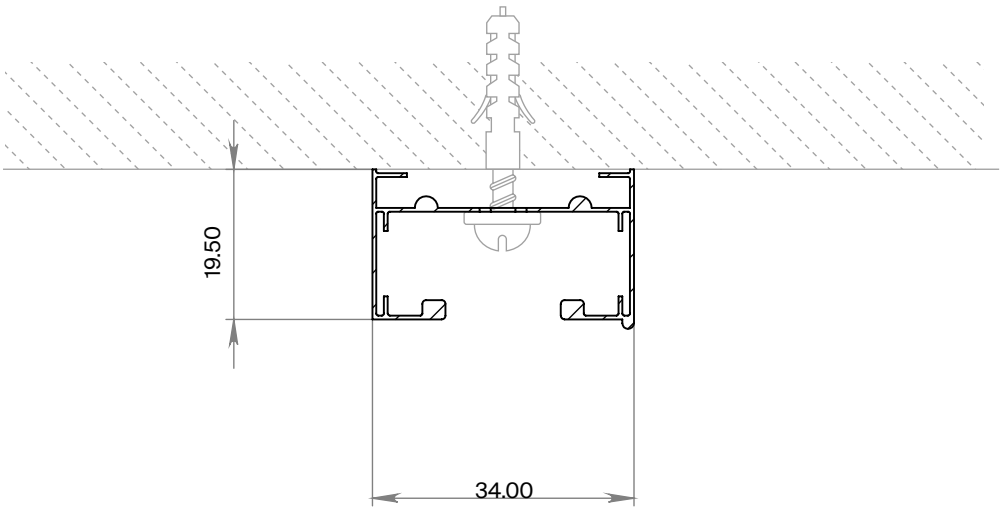

BUSDUCT INSTALLED ON A GYPSUM BOARD CEILING

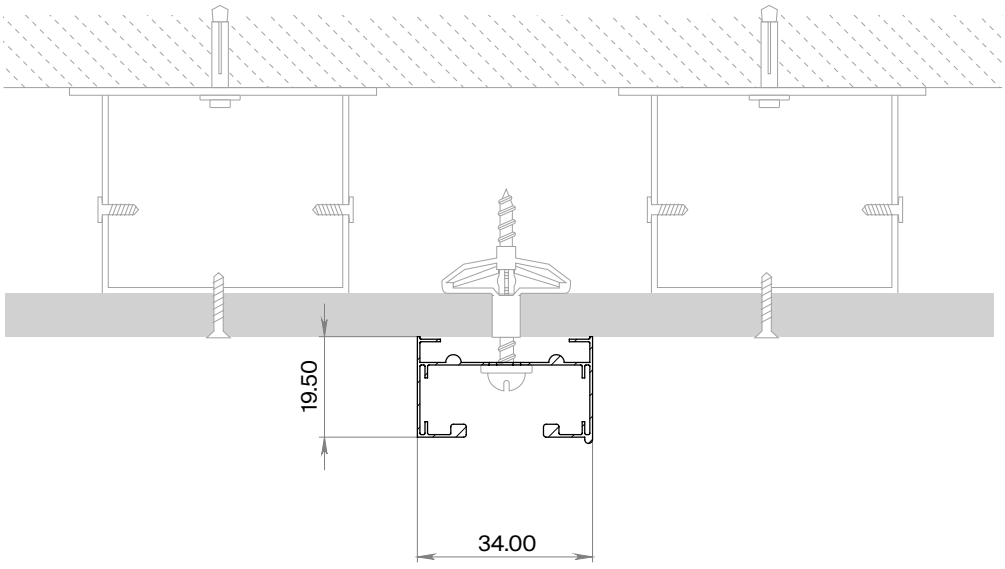

CAUTION
Do not tighten the screws at high screwdriver speed and do not tighten until it stops to avoid deformation of the bus duct.
The rules for installation of fasteners are given in the section "General recommendations and precautions".

INSTALLATION PLAN FOR SURFACE-MOUNTED SINGLE-PHASE BUSDUCT IN SUSPENDED WAY

The surface-mounted single-phase bus duct can be installed in a suspended way on a concrete ceiling and plasterboard suspended ceiling as well as other types of ceiling provided that necessary embedded parts are available and sufficient firmness of construction materials is secured.

When suspending the surface-mounted bus duct, select fasteners that suit to the ceiling material.

For the suspended mounting of the bus duct, use special suspension kits TRA001CW-11B/TRA001CW-11W, consisting of a rope with an end locking element to adjust its length, the bracket and ceiling bowl.

INSTALLATION OF SURFACE-MOUNTED SINGLE-PHASE BUSDUCT USING A SUSPENSION MOUNT

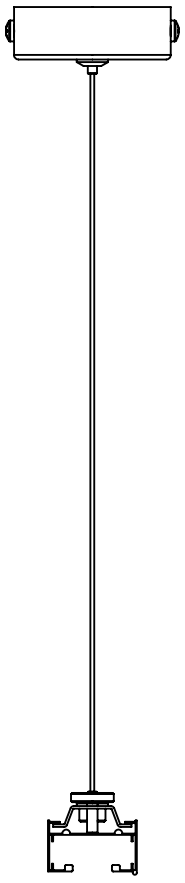

1. Unpack the bus duct and visually check for possible defects.
2. Mark the installation locations and prepare the mounting brackets for their subsequent fixation on the bus duct.
3. Fix the ceiling bowl on the ceiling.
4. Insert the rope into the collet on the mounting bracket and adjust the length.
5. Cut off the unnecessary part of the rope.
6. Fix the bracket on the bus duct with the screws located on top.
7. Use the carpenter level to check the levelness, if necessary, adjust the length of the ropes.

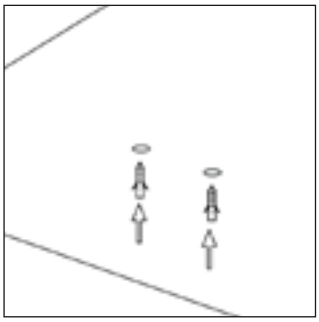

prepare the mounting surface

mark and drill the holes

insert the dowels into the holes

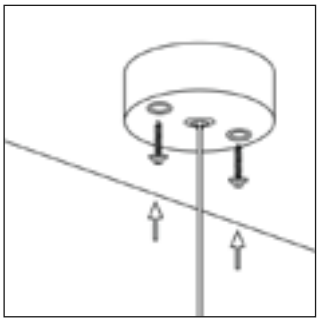

attach the ceiling bowl

fix it with screws

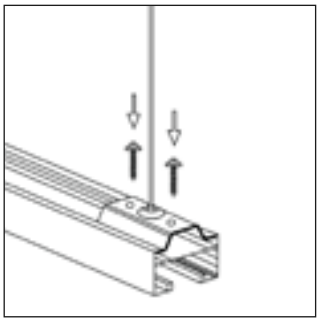

adjust the installation height using the collet fixtures

push the plate into the groove on the back side of the bus duct

fix the plate with screws

CAUTION

When mounting several connected bus duct segments in a suspended way, place them strictly horizontally, avoid skewness and uneven tension of ropes.

INSTALLATION DIAGRAM FOR SURFACE-MOUNTED SINGLE-PHASE BUSDUCT WITH A PROFILE FOR STRETCHED CEILING

INSTALLATION OF SURFACE-MOUNTED SINGLE-PHASE BUSDUCT WITH A PROFILE FOR STRETCHED CEILING

In order to implement this option, you need to purchase the TRA004MP-21S profile in addition to the surface-mounted bus duct and perform installation as follows:

1. Cut the profile and bus duct in the required length.
2. Drill the mounting holes and cable entry holes.
3. Assemble all parts of the profile and bus duct if required, and insert the plugs.
4. Fix the profile to the surface using the mounting angles.
5. Stretch the ceiling cloth and glue the edges of the harpoons along the entire profile length.
6. Leave a slot between the harpoons.

1

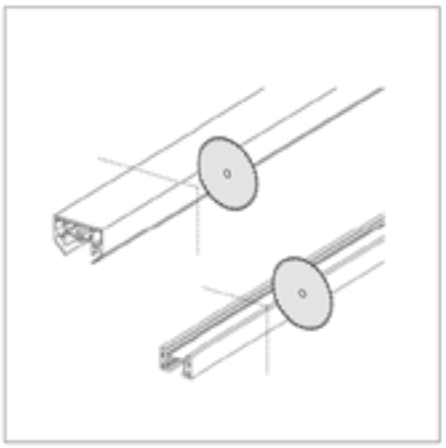

2

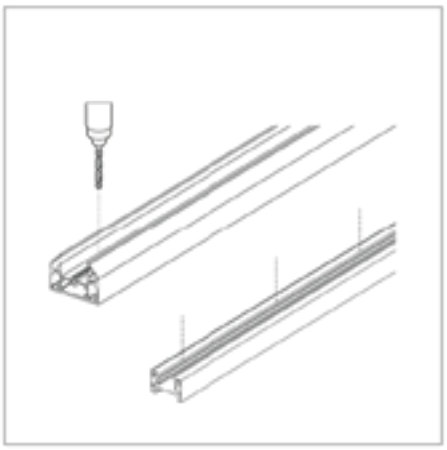

3

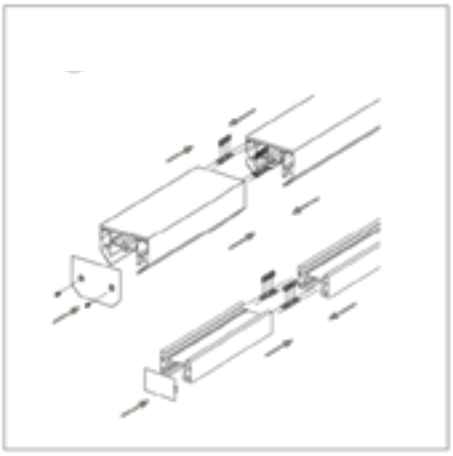

4

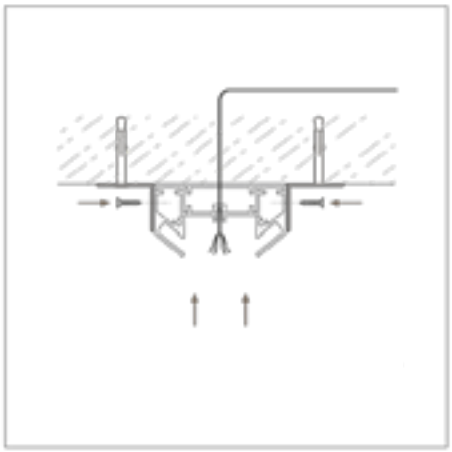

5

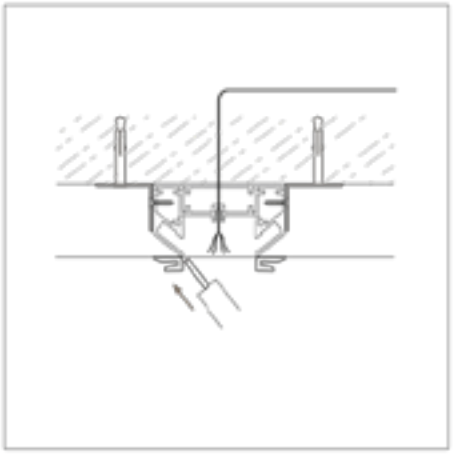

6

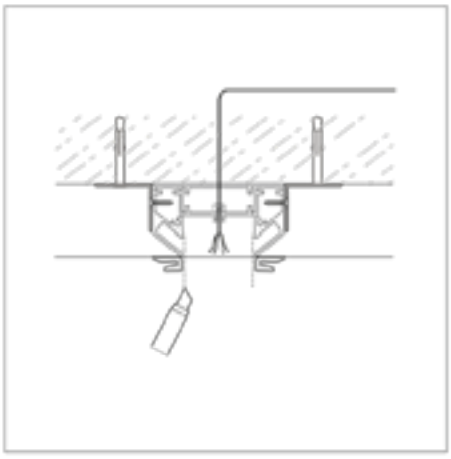

CAUTION

Installation of bus duct with this profile is only possible using PVC cloths for a stretched ceiling.

INSTALLATION DIAGRAM FOR SURFACE-MOUNTED SINGLE-PHASE BUSDUCT WITH A PROFILE FOR STRETCHED CEILING

INSTALLATION OF SURFACE-MOUNTED SINGLE-PHASE BUSDUCT WITH A PROFILE FOR STRETCHED CEILING

7. Put the harpoons into the profile grooves and glue the end faces.
8. Install the bus duct and fix it inside the profile.
9. The bus duct is ready for operation and installation of lamps on it.

7

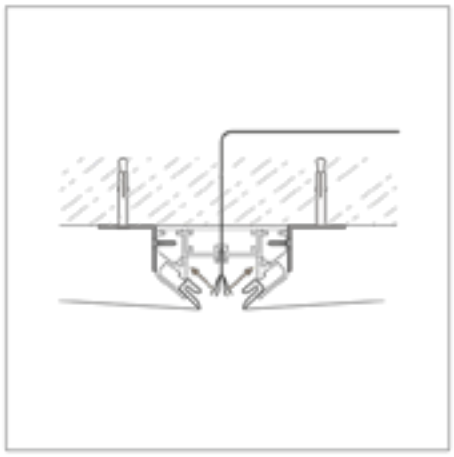

8

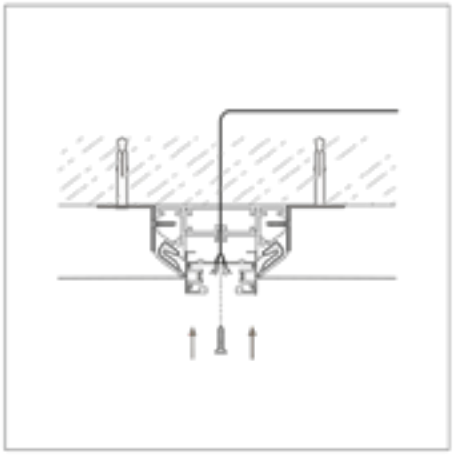

9

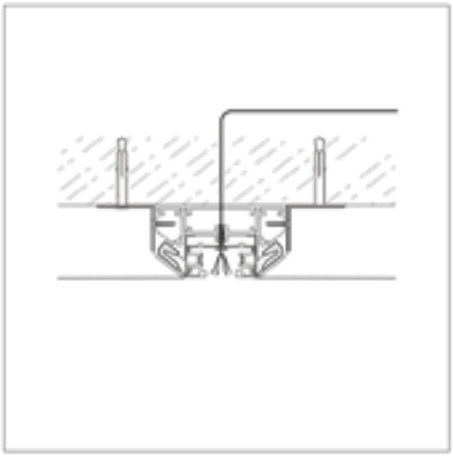

INSTALLATION DIAGRAM FOR BUILT-IN SINGLE-PHASE BUSDUCT

The built-in single-phase bus duct may be installed in a groove or a specially prepared recess and in a suspended ceiling made of gypsum boards.

When installing a built-in bus duct, select fasteners with due regard for the ceiling design.

BUSDUCT INSTALLED IN A GROOVE OR RECESS

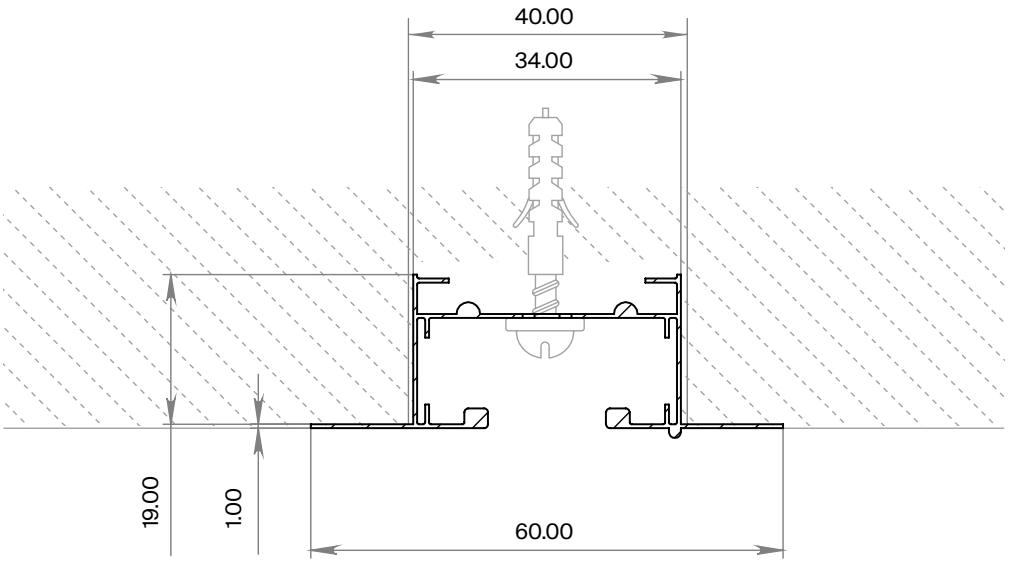

BUSDUCT INSTALLED IN A GYPSUM BOARD CEILING

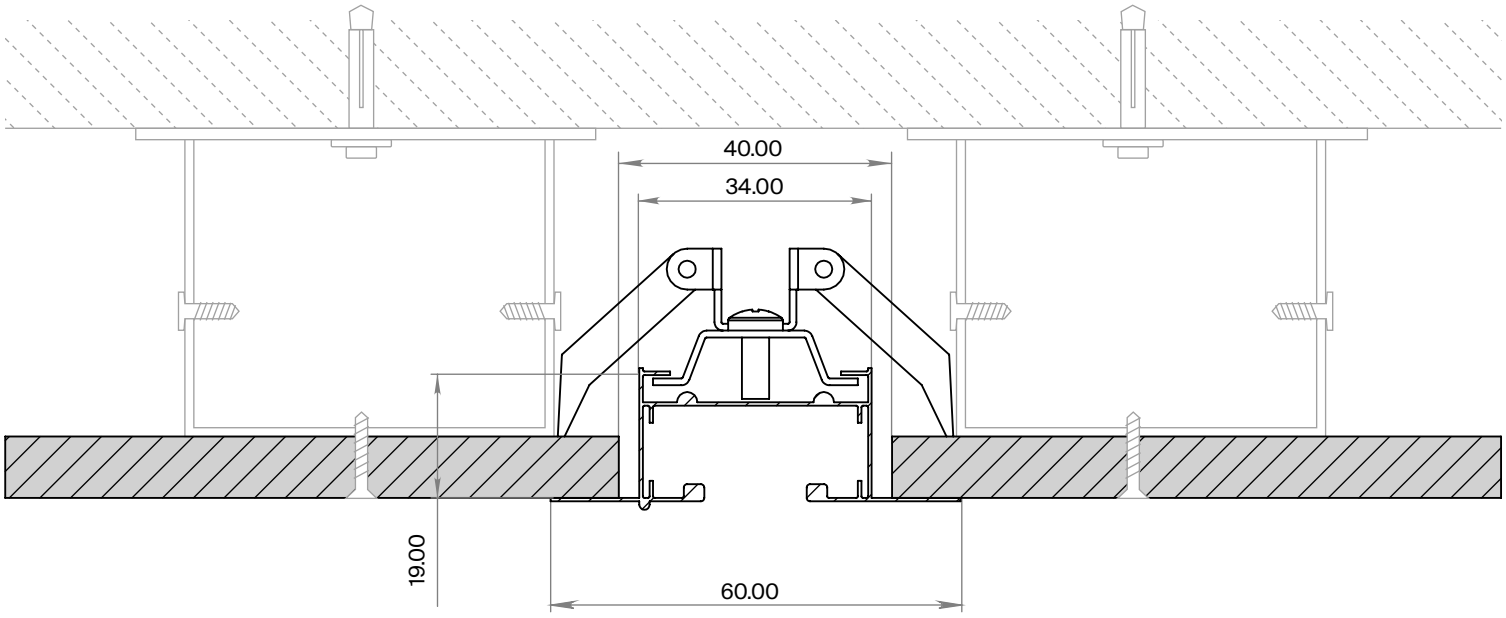

CAUTION

If you wish to install a built-in bus duct in the gypsum board ceiling, use an additional accessory — holder TRA-002HR-11B. The rules for installation of fasteners are given in the section "General recommendations and precautions".

Fault description	Cause	Remedy
The lighting fixture does not operate	Loose connection of current-carrying parts	Install the lighting fixture on the bus duct until full contact between the adapter and current-carrying wires is reached
		Check the contacts of the lead-in cable, connection of the lead-in contacts to the bus duct, and other connections.
	Contact the seller to replace it under a warranty	Contact the seller for a warranty replacement
	Malfunction of lighting fixture	
The lighting fixture flashes or glows dimly in switched-off state	A switch with illuminated keys is installed, or a motion (light) sensor is used to control the lighting circuit	Replace the switch with a model without backlit keys, or with auxiliary incorporated resistor. Use the motion (light) sensor with a relay output only
Unstable glowing, flickering, unusual sound	Brightness control (dimmer switch) is installed in the power supply circuit	Remove the brightness control from the circuit, replace it with a switch
	Defective power supply source / lamp driver	Contact the seller for a warranty maintenance or replacement

STORAGE

Store the product indoors, in the original packaging in a place protected from aggressive environment. Store at a temperature in the range from -20 °C to +70° C and relative humidity not exceeding 95%. Direct exposure to moisture is not allowed.

TRANSPORTATION

The product is shipped in a package which is suitable for transportation by sea, rail, road and air.

DISPOSAL

The product design does not contain any toxic and chemically hazardous substances, therefore it is subject to the regulations of solid waste disposal.

CERTIFICATION

All system components, when the rules specified in the instructions are observed, are safe to operate and comply with all technical regulations applicable in the Customs Union: 004/2011

WARRANTY

The warranty is granted for a period of 24 months from the date of sale which is determined on the basis of documents serving as proof of purchase.

This warranty covers defects in workmanship provided that all rules of operation, transportation and storage given in this manual are complied with.

The warranty is not valid in following cases: if the product has been used for the purposes other than it is intended for; the malfunction occurred after the handover of goods to the consumer and was caused by improper or negligent handling, failure to observe the requirements set forth in these instructions. And in force majeure circumstances as well, in particular in the following events: fire, flood, high-voltage discharges, and other natural disasters, accidents and wilful acts of third parties that caused the product to malfunction.

MANUFACTURER Maytoni GmbH, 2, Rothenburg, 48143 Münster, Germany.

IMPORTER IMPORTER - FAKEL LLC, 119454 City of Moscow, ul. Lobachevskogo, 92, build. 4, room VIA

Developed in Germany.
Made in China.
Shelf life is not limited.

+49 (0) 30 577 067 297
info@maytoni.com

MAYTONI