WIFI

LEDVANCE

SMART+ WIFI CIRCLE CAM CON

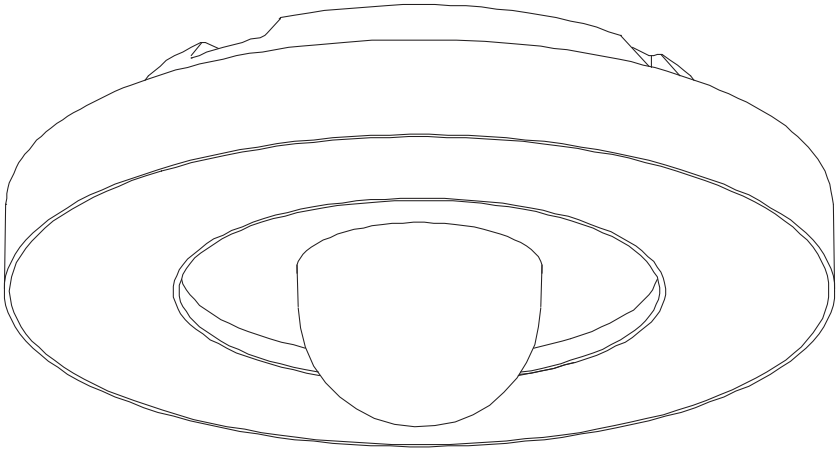

	EAN	W	lm Light Source	lm Output	K	(°C)	V~	mA	Hz	DF	▽(°)	
SMART OUTD WIFI CIRCLE CAM CON	4058075763500	22	2450	1600	3000	-20…+40	220-240	102	50/60	>0.7	112	100000

LEDVANCE

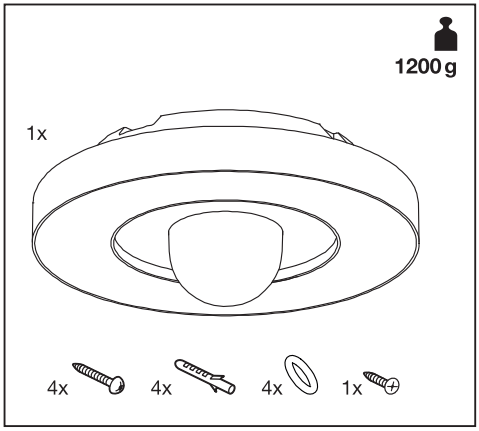

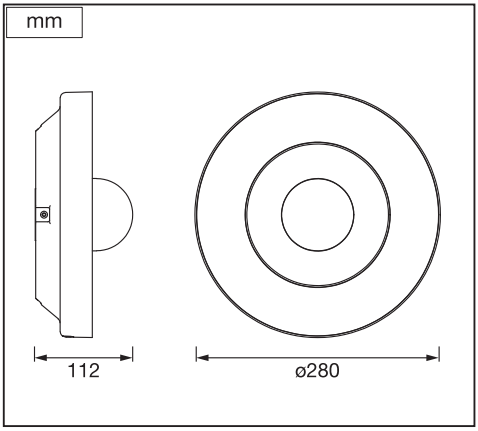

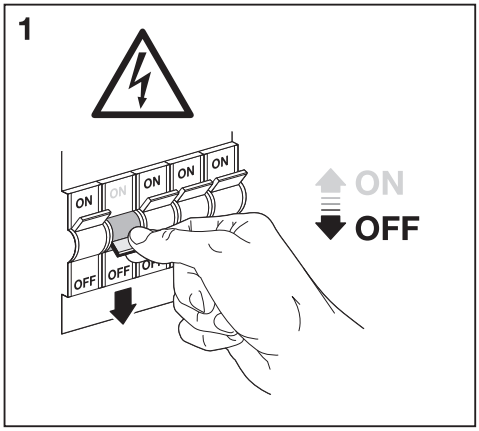

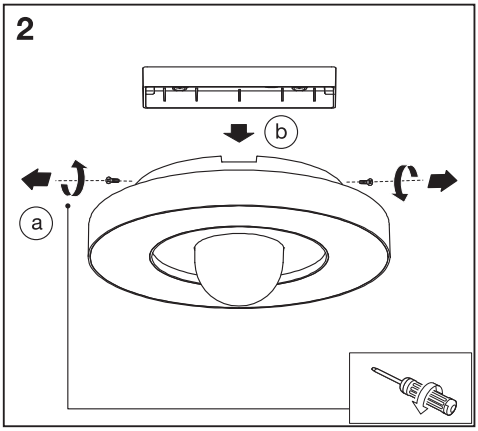

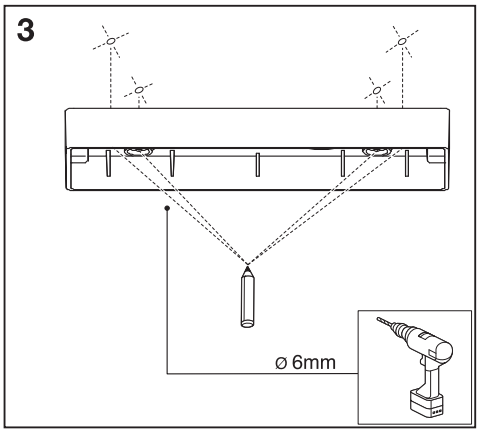

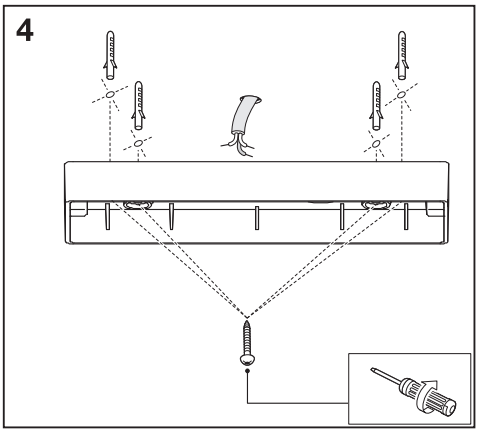

5

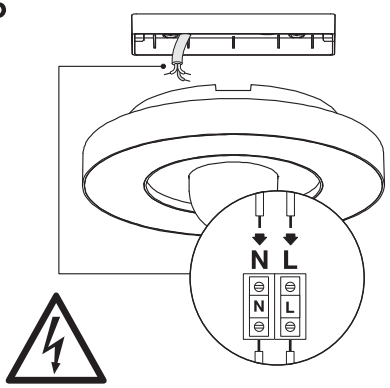

6

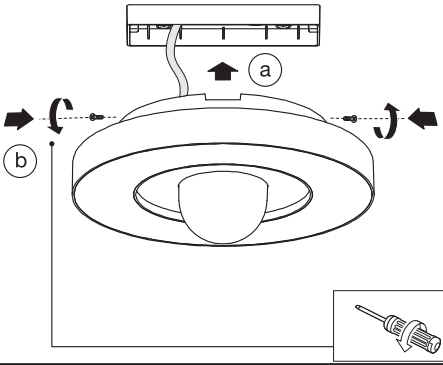

7

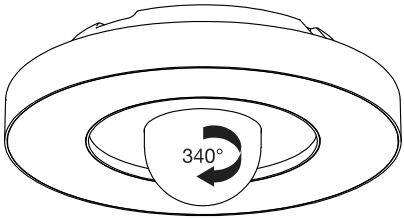

8

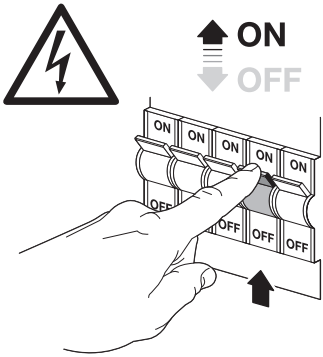

9

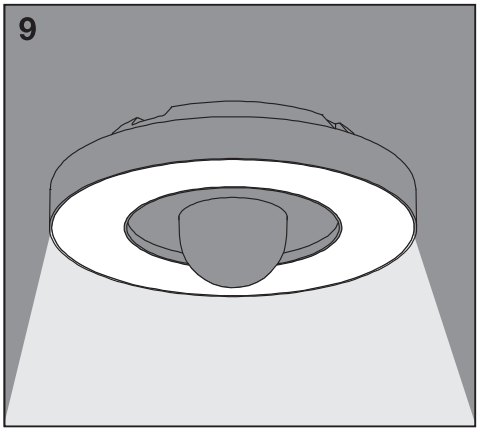

LEDVANCE

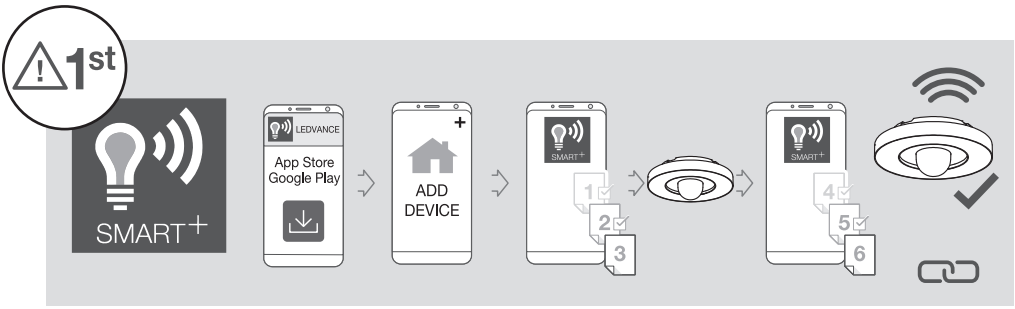

OPTIONAL

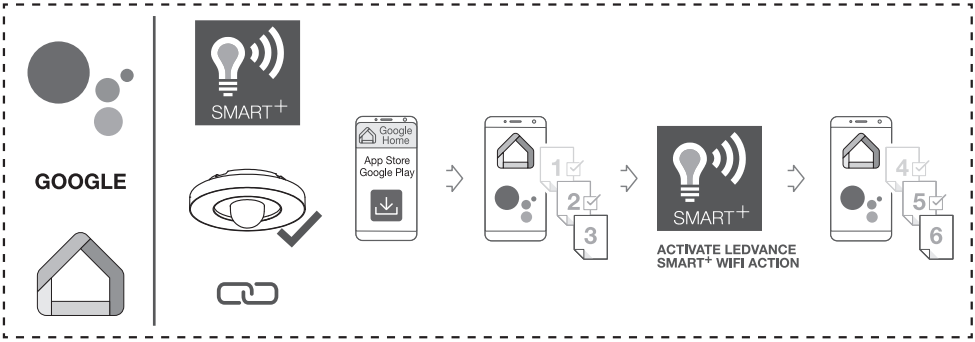

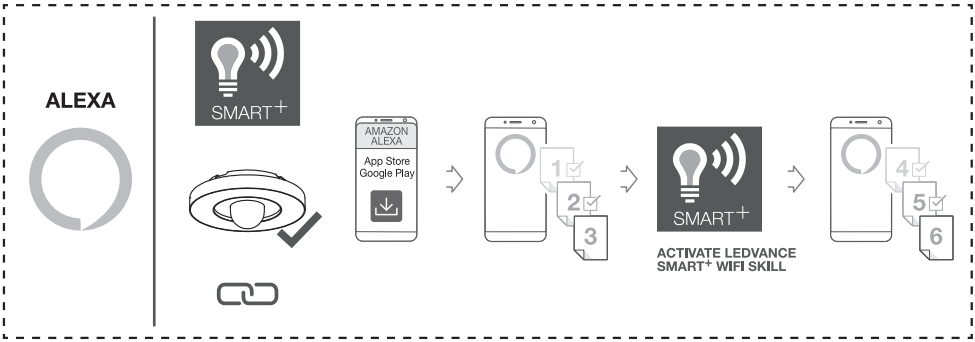

TROUBLESHOOTING



DECREASE DISTANCE

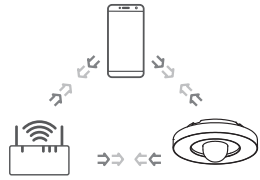

RESET

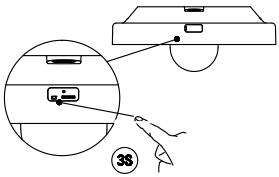

https://www.ledvance.com/consumer/smart/faq/